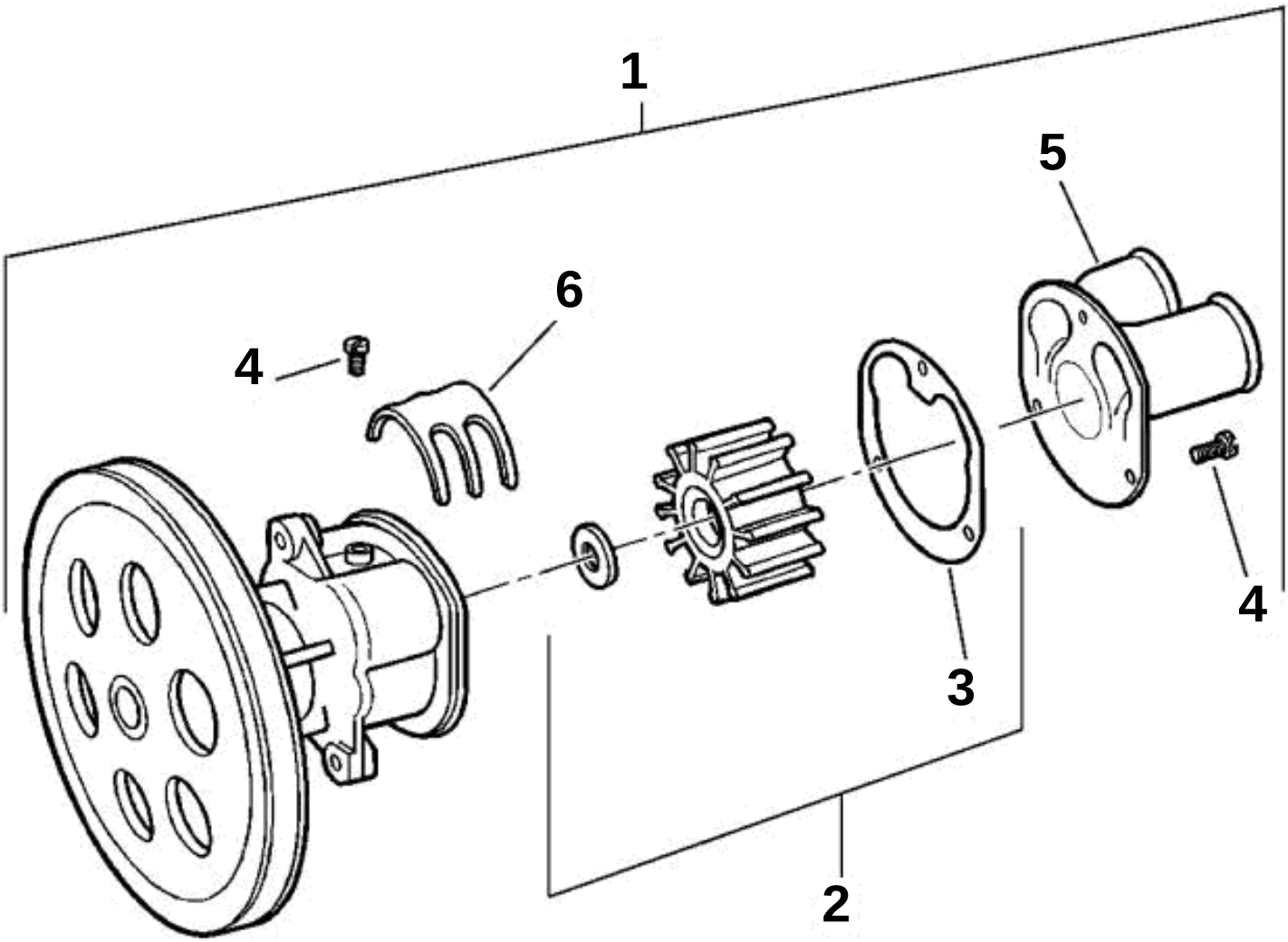
1
5
6
4
4
3
2

WATER PUMP

REF	PART NO.	QTY	DESCRIPTION	SEE SEC.	NOTES
1	3857794	1	Sea water pump		
2	3856039	1	· Impeller kit		
			· Bulletin P-26-6-2	P-26-6-2-EN	Impeller kits
3	3855782	1	· · Gasket, Plate to body		
4	841693	4	· Screw, Cam to housing		
5	3851697	1	· End cover		
6	3858086	1	· Pump cam, Impeller		